WOLF 2MS

WOLF 1MS

FM OFF AIR MONITOR SYSTEM *Rev 4.5*

HIGHLIGHTS

- Real Time measurement for FM networks
- Single/double high quality FM Tuner
- Signal analysis modules: RF, MPX, AUDIO and RDS
- Configurable single/*bandscan* for each FM tuner
- Embedded web server for worldwide consultation
- Single/double Audio over-IP streaming for monitoring
- Single/double RDS decoder with group sequence decoding
- SNMP and HTTP web interface and FTP supported
- Double Ethernet ports and double USB interfaces
- Front LCD display and front panel headphone output

PRODUCT OVERVIEW

Wolf 1MS and Wolf 2MS are FM monitoring systems designed for FM Off Air signal monitoring purpose. Wolf 1MS is provided with one high quality FM tuner, while Wolf 2MS allows the broadcaster to receive up to two frequencies thanks to internal double tuner. Tuners are each other independents and they can operate in three ways: *Continuous reception*, *bandscan* and *SmartScan*.

Internal tuner assures strong performances in FM reception, RF and MPX audio analysis and RDS data stream output. The monitoring made on FM channels can be a basic RF analysis or an advanced RF, MPX and AUDIO measurement.

- *Continuous reception:* a single carrier is selected and under monitoring.
- *Bandscan mode:* a total of 32 FM Channels can be scanned and monitored in Wolf 1MS and 64 FM Channels for Wolf 2MS. The *bandscan* time is also user definable, in a range from 1 second up to 10 seconds for each channel.
- *SmartScan* mode allows an intelligent and variable scan time that is adjusted automatically to fit the instantaneous measurement requirements. This is to avoid false-positive rising errors.

During *continuous reception* mode, each single tuner checks and completely decodes the multiplexed signal:
Mono level, Pilot level, Audio and RDS levels are measured and kept always under control. All captured datas during FM Channel monitoring can be sent to a Network Management System (such as Axel Technology's *Ranger*) or showed in a common password protected web page. Communication between *Wolf 2MS* and *Ranger NMS* is SNMP v2C protocol. For all single parameter under monitoring, a threshold can be set. If one or more values go out of range, alarms are delivered.

Tuners modules are with extended RF input range from 11dBuV to over 120dBuV through an internal programmable attenuator. FM monitor will be able to work nominally at its best with strong RF levels from 80dbuV to over 120dBuV coming from an RF combiner. RF sensitivity of 20-30dBuV will be still available for the use as audio and RDS-UECP re-broadcaster.

Once the RF signal is received, audio should be streamed from the transmitter site back to a remote logging system. The streamer input allows an internal selection between all inputs available: Tuners, External Analog In, External AES/EBU In.

Wolf 1MS and Wolf 2MS are completed with "*External Input*" source: analog Left+Right input and Digital Left+Right in AES/EBU format. This audio input is continuously monitored: silence detection (Threshold/time and level), left and right presence, peak left, peak right. Rear-panel audio output always presents the audio decoded from Tuner-1 or Tuner-2 and this setting is user definable while audio is available on Analog or AES/EBU format.

Wolf 1MS and Wolf 2MS provide a large variety of connection: double Ethernet port, USB and front panel headphone output, 4x GPIn opto coupled and 4x GPOut over relays. Rs232 serial port for RDS-UECP bridging and rebroadcasting purposes, and rear panel placed SD card to store or recall the complete equipment configuration.

RF antenna inputs are over BNC connectors, a XLR balanced stereo analog input and output, AES/EBU input and output. OS and datas are loaded and stored over solid state memory as SD and flash RAM. Universal switching power supply to operate worldwide, 1 rack unit space in fan-less configuration.

MEASURES AND COMPARISON TABLE

	General features	Wolf 1MS	Wolf 2MS	
	Number of FM tuners on board	1	2	
	FM channels under monitor	32 Channels	64 FM Channels (32 FM/Tuner)	
	Scanning mode	Single, Bandscan and *SmartScan*		
	Streaming available	1	2	

Field	Type of measure	Measures made by Wolf 1MS –Wolf 2MS	U.M
RF	4x RF Level Lower threshold	Measure, alarm via email/trap SNMP	dBµV
	2x Adjacent Channel L1 threshold		
	Alternative Channel - Worse	Measure	dBr
	Carrier precision	Measure	ppm
	Multi Path	Measure	%
MPX	Deviation Max	Measure, alarm via email/trap SNMP	kHz/dBr
	2x Pilot Lower level - 2 threshold level		
	MPX Power – ITU-R BS.412		
RDS Level	RDS Level Lower threshold		
	RDS Level Higher threshold		
AUDIO	Peak Left - Peak Right threshold	Measure, alarm via email/trap SNMP	dBr
	RMS Left - RMS Right threshold		
	Audio Imbalance – L/R delta threshold		
	Mono silence – L+R threshold		
	Audio MPX deviation threshold	Measure, alarm via email/trap SNMP	kHz
	Audio MPX Silence detection threshold	Measure, alarm via email/trap SNMP	s
	Audio Left –Right Silence det. threshold		
RDS Data	AF-Complete Decoding + Visualization PS – 4 PS matching reference PI – 3 PI Code matching reference CT – Time offset DI – Decoder Information PTY – Program Type TP/TA – timeout TA M/S – Music Speech BLER – Block Error Rate TMC – AID – Group – Data EON Enhance Other Channel RT – RT+ data decoding LA – EG – ILS – LSN-PIN ODA TMC ODA RT+ ODA-1 ODA-2 SLC0 – SLC1 - SLC2 - SLC3 - SLC4 - SLC5 - SLC6 - SLC7	RDS Data decoding group, visualization and storage. Alarm generation in case of error, can be showed in a common web page or delivered via email. Interfacing with NMS allows equipment to deliver traps using SNMP protocol.	

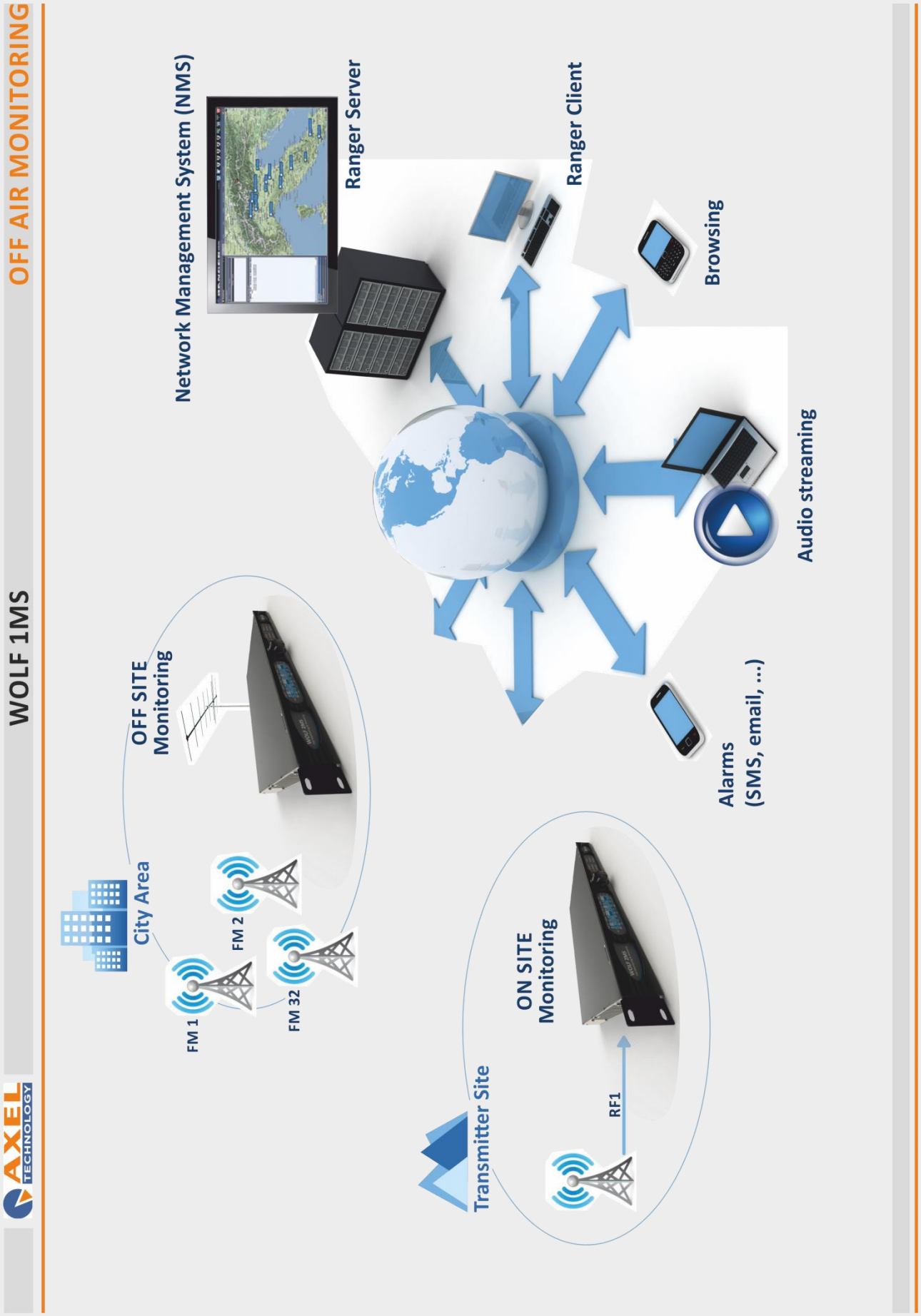
OFF AIR MONITORING
WOLF 1MS
Network Management System (NMS)
Ranger Server
Ranger Client
Browsing
Audio streaming
Alarms
(SMS, email, ...)
OFF SITE
Monitoring
City Area
FM 1
FM 2
FM 32
ON SITE
Monitoring
Transmitter Site
RF1

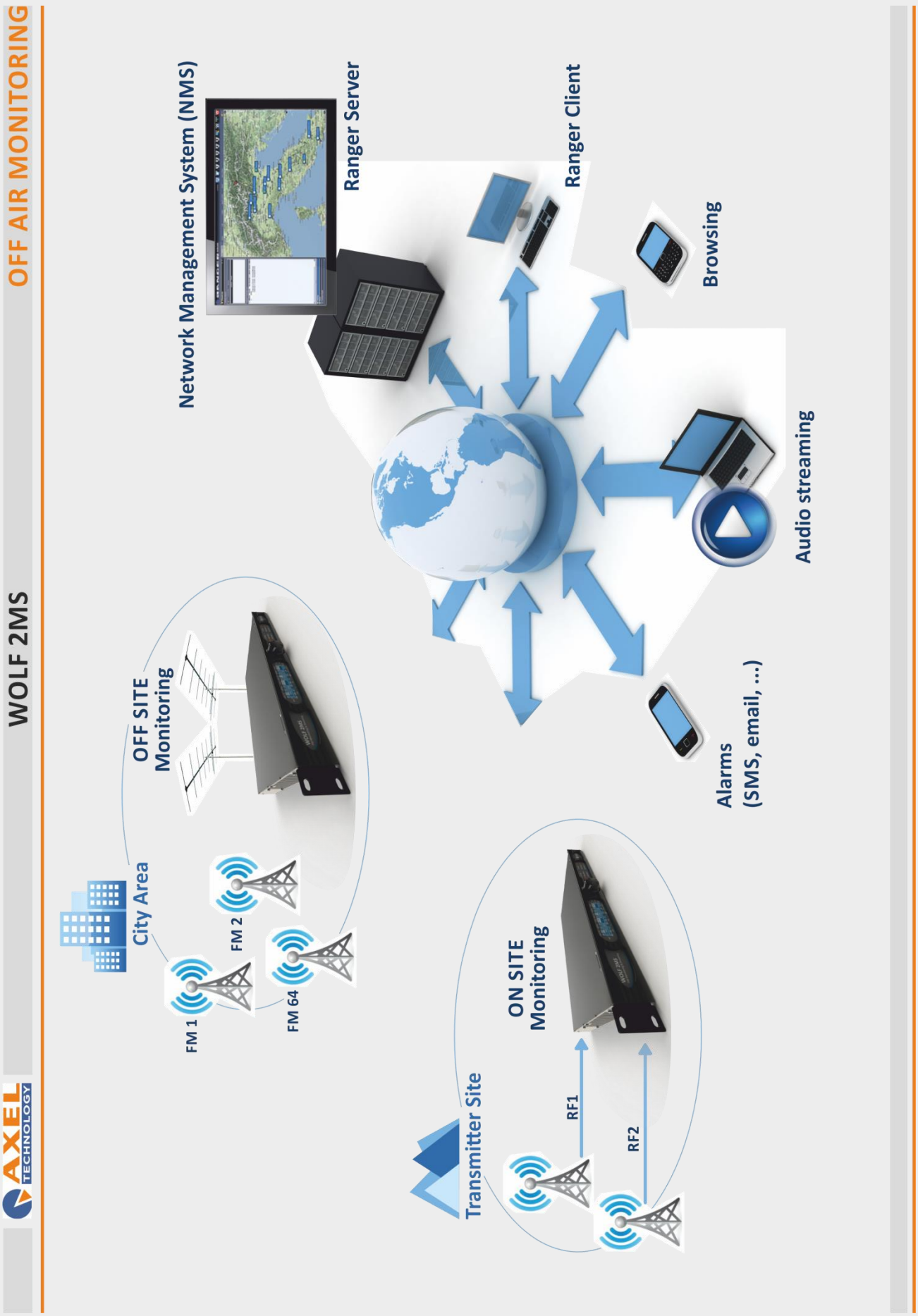
AXEL TECHNOLOGY
WOLF 2MS
OFF AIR MONITORING
Network Management System (NMS)
Ranger Server
Ranger Client
Browsing
Audio streaming
Alarms
(SMS, email, ...)
OFF SITE
Monitoring
City Area
FM 1
FM 2
FM 64
ON SITE
Monitoring
Transmitter Site
RF1
RF2

FRONT- REAR PANEL DETAIL

In the left side display the first row is divided for *TUNER-1* and *TUNER-2* frequency and RDS-PI code. The STATUS field indicates the condition (status) of the frequency under control. The scan value indicates the scanned frequency and all the related value, frequency in MHz and PI code, this scan value (01-02-.. up to 32) rotate around each 5 seconds. Same behavior for the Tuner-2.

Wolf 2MS – Front Panel

INFO row shows some information about Wolf 2MS shown such as PS for Tuner-1 and PS for Tuner-2 about the frequency under control, or the set of *bandscan* frequency. Last row shows date & time and *ALARM PANEL*.
If TU1 is set in the *ALARM PANEL* field, the right side 6 leds panel shows if lighted on the alarms related to Tuner -1. Same for Tuner -2.

Wolf 2MS – Rear Panel

Wolf 1MS shows some differences between Wolf 2MS in particular about right 6 leds panel side. Accordingly to one RF tuner is it possible for Wolf 1MS to report about more alarms related to a single frequency under control. PS, PI Code and frequency are showed into 3 rows LCD display, moreover each single RF and MPX component such as deviation, RF level, Stereo Pilot and RDS deviation are clearly reported.

Wolf 1MS – Front Panel

Back side Wolf 1MS and Wolf 2MS allows a large variety of connection, AES/EBU and analog balanced input/output connections are provided over standard XLR connectors. Double Ethernet and USB –A type port make Wolf 1MS and Wolf 2MS equipment perfectly matching the most demanding broadcast market application. Furthermore GPIO opto coupler Input and relay output provides a seamless integration with 3rd party equipment. RDS decoded data in UECP format can be gived back over SubD 9p female connector, for rebroadcasting purposes.

Wolf 1MS – Rear Panel

WOLF 1MS – WEB PAGE

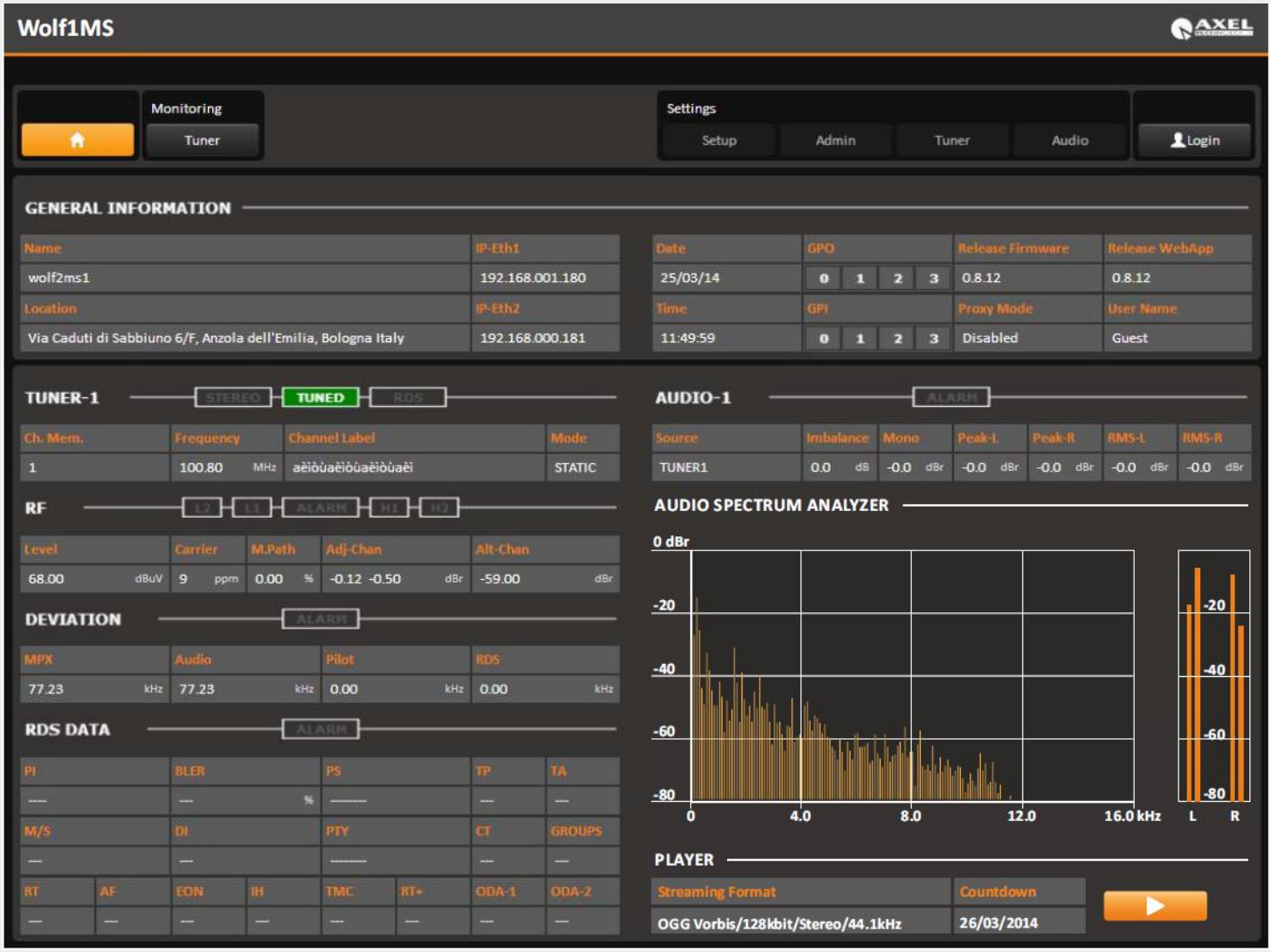

WOLF 2MS – WEB PAGE

Wolf2MS

Monitoring: Tuner-1 Data | Tuner-2 Data

Settings: Setup | Admin | Tuner-1 | Tuner-2 | Audio | Logout

GENERAL INFORMATION

Name	IP-Eth1	Date	GPO	Release Firmware	Release WebApp
Anzola Emilia	192.168.050.202	27/03/14	0 1 2 3	0.8.11	0.8.6
Location	**IP-Eth2**	**Time**	**GPI**	**Proxy Mode**	**User Name**
Gabry	010.000.127.002	14:36:43	0 1 2 3	Disabled	admin

TUNER-1

STEREO | TUNED | RDS

Ch. Mem.	Frequency	Channel Label	Mode
15	106.80 MHz	Radio 24 - II Sole24Ore	STATIC

RF — L2 | L1 | ALARM | H1 | H2

Level	Carrier	M.Path	Adj-Chan	Alt-Chan
51.88 dBuV	4 ppm	2.55 %	-20.55 -25.55 dBr	-6.22 dBr

DEVIATION — ALARM

MPX	Audio	Pilot	RDS
82.46 kHz	79.07 kHz	0.00 kHz	3.39 kHz

RDS DATA — ALARM

PI	BLER	PS	TP	TA
5245	000 %	RADIO 24	ON	OFF
M/S	**DI**	**PTY**	**CT**	**GROUPS**
MUSIC	MONO STATIC	NEWS	---	OK

RT	AF	EON	IH	TMC	RT+	ODA-1	ODA-2
OK	OK	---	---	---	---	---	---

AUDIO-1 — ALARM

Source	Imbalance	Mono	Peak-L	Peak-R	RMS-L	RMS-R
TUNER1	0.0 dB	-6.7 dBr	-0.3 dBr	-0.3 dBr	-6.7 dBr	-6.7 dBr

Ready

countdown 00:01:00

TUNER-2

STEREO | TUNED | RDS

Ch. Mem.	Frequency	Channel Label	Mode
1	100.80 MHz	TX	STATIC

RF — L2 | L1 | ALARM | H1 | H2

Level	Carrier	M.Path	Adj-Chan	Alt-Chan
93.00 dBuV	4 ppm	0.00 %	-36.44 -37.44 dBr	-74.00 dBr

DEVIATION — ALARM

MPX	Audio	Pilot	RDS
74.55 kHz	65.10 kHz	6.65 kHz	2.80 kHz

RDS DATA — ALARM

PI	BLER	PS	TP	TA
5201	000 %	RAI	ON	OFF
M/S	**DI**	**PTY**	**CT**	**GROUPS**
MUSIC	STEREO STATIC	NEWS	OK	OK

RT	AF	EON	IH	TMC	RT+	ODA-1	ODA-2
OK	OK	OK	---	---	---	---	---

AUDIO-2 — ALARM

Source	Imbalance	Mono	Peak-L	Peak-R	RMS-L	RMS-R
TUNER2	0.4 dB	-10.2 dBr	-4.0 dBr	-3.7 dBr	-10.6 dBr	-9.7 dBr

Ready

countdown 00:01:00

WOLF 1MS – WOLF 2MS BLOCK DIAGRAM

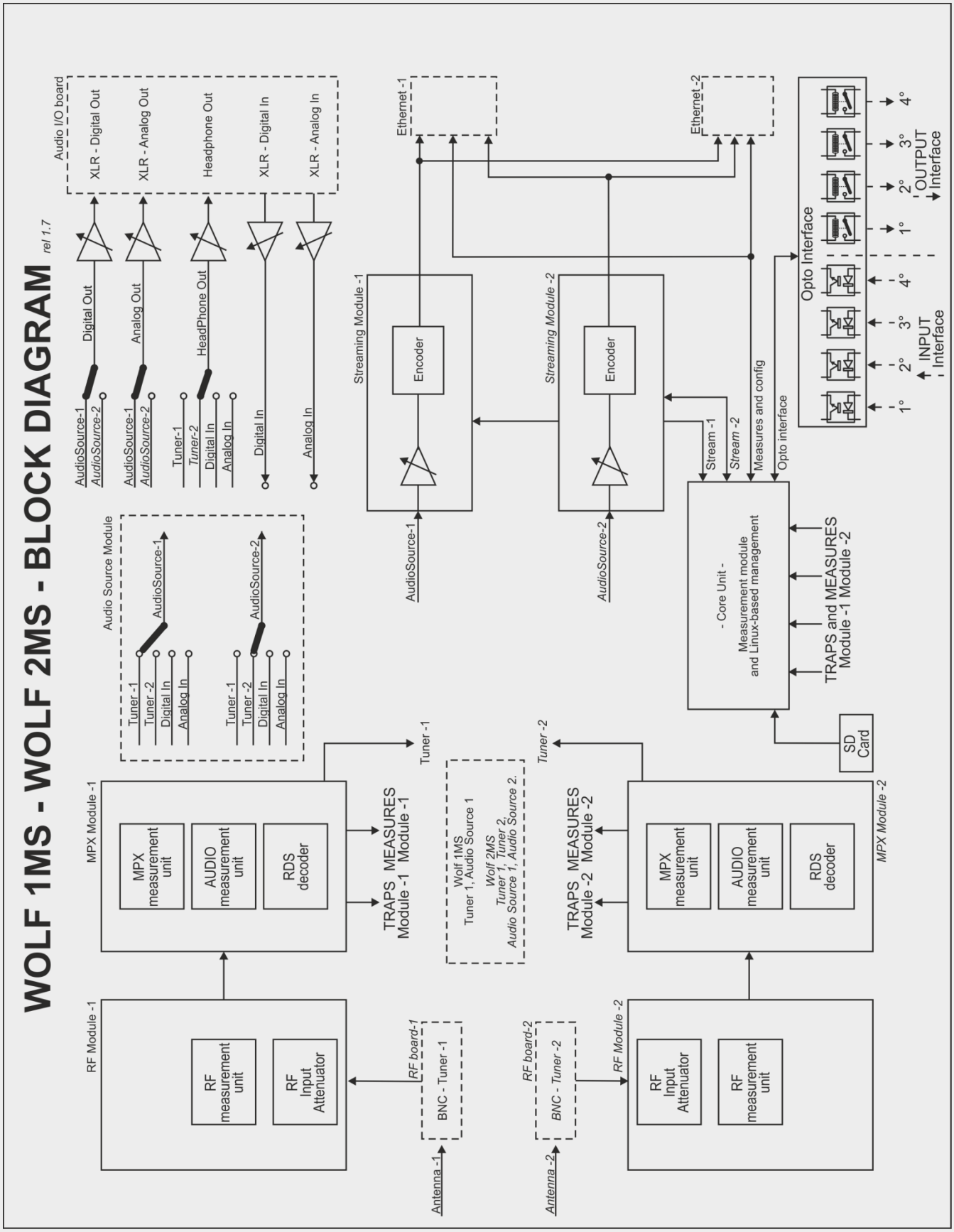

TECHNICAL SPECS

PARAMETER	**DESCRIPTION**
Main Power	100 Vac – 240 Vac 50/60 Hz internal, universal power supply
Power consumption	25 W
Power connector	IEC plug filter with internal fuse 2.0 AT
Headphone	Stereo Jack 6.3 mm
Safety and EMC	Compliant to CE laws
Working temperature	0° to 50° C (storage -5 to + 50 °C)
Housing Dimensions	19 inch x 1u x 240 mm (depth)
Weight	3.5 kg
RF TUNERS	
Tuner frequency	87.5 MHz - 108.0 MHz
Tuner step	10 kHz
RF tuning stability	+/- 500 Hz
RF input sensitivity	20 to 120 dBµV
RF input nominal level	80 to 100 dBµV
RF inputs main	2x BNC, with 50 Ohm unbalanced
Max frequency deviation	125 kHz
IF Filter bandwidth	34 kHz to 138 kHz – Manual or Automatic
Input RF level	30 dBµV – 120 dBµV with Internal attenuator
Bandscan carrier number	32 Channels
Bandscan time	Static Mode, Scan 1s to 10s and Smart Mode*
Selectivity at ± 120 kHz	>-3 dB
Selectivity at ± 200 kHz	>-40 dB
Selectivity at ± 300 kHz	>-50 dB
Selectivity at ± 400 kHz	>-65 dB
Image Rejection @ 22.5 kHz	70 dB
Adjacent channel rejection	63 - 65 dB
Alternate channel rejection	65 - 72 dB
THD @ dev=75 kHz	0.05 – 0.1 %
Mono (S+N)/N	75 dB typ – 68 dB min (No A-Weighting 30 Hz – 15 kHz)
STEREO DECODERS	
Stereo (S+N)/N	70 dB typ – 64 dB min (No A-Weighting 30 Hz – 15 kHz) • 40 dBµV – 61 dB Stereo/61 dB Mono • 50 dBµV – 69 dB Stereo/72 dB Mono • 60 dBµV – 78 dB Stereo/78 dB Mono • 70 dBµV – 83 dB Stereo/85 dB Mono
Pilot 19kHz suppression	55 dB (Stereo modulation L = 1, R = 0,Deviation=67.5 kHz, pilot deviation=6.75 kHz)

Stereo THD+N	0.1 % - 0.2 % (Stereo modulation L = 1, R = 0,Deviation=67.5 kHz, pilot deviation=6.75 kHz) Measures @ 70 dBuV with 75 kHz • 100 Hz - 0.055 % • 1 kHz - 0.061 % • 5 kHz - 0.19 % • 10 kHz - 0.46 %
Stereo separation	45 dB (Stereo modulation L = 1, R = 0,Deviation=67.5 kHz, pilot deviation=6.75 kHz) • 400 Hz – 48 dB • 1 kHz – 48 dB • 5 kHz – 48 dB • 10 kHz – 38 dB • 14.7 kHz – 38 dB
RDS DECODER	
RDS Sensitivity	20 dBµV (dev f = 2 kHz, RDS BLER < 5%)
RDS Synchronization time	80 ms (dev f = 2 kHz RF input = 60 dBµV)
RDS PI Lock time	100 ms (dev f = 2 kHz RF input = 60 dBµV)
RDS data decoding and Streaming	RDS Level indication and deviation (voltage, kHz and dBr)
RDS Data decoding services	PS, PI, M/S, DI, TP, TA, AF, AF List Presence A/B Method, Scrolling PS, AF EON, RadioText, RadioText Plus, CT, PTY, PIN, IH, TMC, EWS, TDC . ODA generic services. RDS error detection with three shold adjustable
RF MEASUREMENT MODULE	Ranges – Resolution - Precision
RF Level	0 – 80 dBµV (Resolution 1 dBµV, precision 2 dBµV) 82 – 120 dBµV (Resolution 2 dBµV, precision 5 dBµV)
Deviation	0-125 kHz (Resolution 1 kHz, precision 2 kHz)
Tuned Carrier Frequency Offset	0-250 ppm (Resolution 2 ppm, precision 5 ppm)
Multipath	0-100 %
Adjacent Channel RF Level	0 – 80 dBµV (Resolution 1 dBµV, precision 2 dBµV) (+-200kHz)
MPX MEASUREMENT MODULE	Ranges – Resolution - Precision
Pilot Level	0-20 kHz (Resolution 0.1 kHz, precision 0.2 kHz)
Rds Level	0-20 kHz (Resolution 0.1 kHz, precision 0.2 kHz)
Mpx Power ITU-R-BS412	-20 dBr to + 12dBr (Resolution 0.1 dBr, precision 0.2 dBr)
Stereo	Valid Stereo signal detector
AUDIO MEASUREMENT MODULE	Ranges – Resolution – Precision
Left Quasi Peak	Programmable Attack Time from 0 mS to 2mS (Resolution 0.1 dB)
Right Quasi Peak	Programmable Attack Time from 0 mS to 2mS (Resolution 0.1 dB)
Audio Silence	Threshold -80 dB to 0 dB, Time: 1-120 Sec
Unbalanced Stereo Signal	Threshold -80 dB to 0 dB, Time: 1-120 Sec

AUDIO OUTPUT	
Available output on XLR	Tuner-1 or Tuner-2, definable via web page. Same audio on Analog and AES/EBU
Audio frequency response	30 Hz—15 kHz, ± 0,3 dB
Phones (Front Panel)	Stereo jack 6.3 mm, 150 Ohm, 0.8 W
ANALOG OUTPUT MODULE	
D/A Conversion	24bit Sigma-Delta Conversion – 32 kHz Sample rate
Connectors	2x XLR, male - Electronically balanced
Output Level	-12.0 dBu to +14.0 dBu (0.1 dBu Step) – Max (+20 dBu)
Impedance Source	47 Ω
Load Impendance	600 Ω or greater
Distorsion	Less than 0.02% TDH+Noise (0.0dBu @ 1Khz)
Dynamic range	108 dB (110 dB A-weighted, 20Hz – 15kHz)
Sources	Streamer1_Source , Streamer2_Source
DIGITAL OUTPUT MODULE	
Connectors:	XLR, Male – Electronically balanced
Format	AES3/EBU
Sample rates	32 kHz
Resolution	24 bits
Operative Nominal level:	From 0.0 dBFs to -24dBFs (0.1 dBu step)
Dynamic Range:	125 dB (Typ), 122 dB (Min)
Distortion	less than 0.01% TDH+NOISE (-20dBFs @ 1Khz)
Freq response	20Hz-15kHz
Dynamic range	108 dB
Sources	Streamer1_Source , Streamer2_Source
AUDIO INPUT	
Encoder Streaming Input source	User selectable between Tuner-1, Tuner-2, External Input Analog, External Input AES/EBU
DIGITAL INPUT MODULE	
Connectors:	XLR, female – Electronically balanced
Format	AES3/EBU
Sample rates	32 kHz / 44.1 kHz / 48 kHz / 96 kHz with src and jitter correction
Operative Nominal level:	From 0.0 dBFs to -24dBFs (0.1 dBu step)
Dynamic Range:	125 dB (Typ)
Distortion	less than 0.01% TDH+Noise (-20dBFs@ 1Khz)
Input Modes:	Stereo, Mono (Left), Mono (Right), Mono (Left+Right)
ANALOG INPUT MODULE	
A/D Conversion	24bit Sigma-Delta Conversion – 32kHz sample rate
Connectors:	XLR, female - Electronically balanced
AD Clipping Point	+20.0dBu
Operative Nominal Level:	From –12.0dBu to +12.0dBu (0.1dBu Step)
Line Impedance	10 kΩ (Electronically balanced selectable) EMI–suppressed
Distortion:	less than 0.02% TDH+NOISE (0.0dBu @ 1Khz)
AD Dynamic Range:	108 dB RMS (110 dB A-weighted, 20Hz - 15kHz)
Input Modes:	Stereo, Mono (Left), Mono (Right), Mono (Left+Right)

AUDIO & RDS STREAMING MODULES	
Protocols	UDP/RTP, TCP/IP, Shoutcast and IceCast2
Encoders	OGG-VORBIS, MP3*, AAC*, HE-AAC*, HE-AAC-V2*
Interface	Ethernet Port 10/100 Mb/s
Bitrate	User select 24 kbps to 128 kbps
Sample Rates	32Ksamples/sec
Notes*	Available as an option
RDS Streaming	Proprietary redundant protocol over UDP or RAW-TCP/IP
Administration	User right management

ORDERING INFORMATION

CODE#	MODEL	COMMERCIAL DESCRIPTION
A110160020	**WOLF 1MS**	Monitoring system for FM networks. Internal FM tuner with configurable band scan. Real time measures on RF, MPX, Audio and RDS decoder with group sequence. HTTP, SNMP, FTP and XML protocol. Web server and audio streaming for monitor. 2x LAN/USB and GPIO. Headphone output and universal power supply.
A110160001	**WOLF 2MS**	Dual FM monitoring system for FM networks. Double internal tuner with configurable band scan. Real time measures on RF, MPX, Audio and RDS decoder with group sequence. HTTP, SNMP, FTP and XML protocol. Web server,double audio streaming for monitor. 2xLAN/USB and GPIO. Headphone output. Universal PSU
A110160020	**WOLF 1MS**	Système de surveillance pour les réseaux FM. Tuner interne pour band-scan configurable. Mesure en temps réel de RF, MPX, audio et RDS (séquence de décodage). HTTP, SNMP, FTP et XML. Serveur Web, double moniteur streaming audio. 2xLAN, USB et GPIO.Prise casque enface. Alimentation universelle
A110160001	**WOLF 2MS**	Double système de surveillance pour les réseaux FM. Double tuner interne pour band-scan configurable. Mesure en temps réel de RF,MPX, Audio et RDS (séquence de décodage). HTTP,SNMP,FTP-XML. Serveur Web, double moniteur streaming audio.2xLAN,USB et GPIO. Prise casque enface. Alimentation universelle

SHORT DESCRIPTION FORM

WOLF 1MS - EN VERSION

Wolf 1MS is a FM monitoring system designed for FM signal monitoring purpose. Wolf 1MS allows the broadcaster to receive up to 32 channels, through the internal FM tuner. The RF tuner performs a complete analysis of: RF, MPX, RDS, Audio (peak/RMS), RDS data static-dynamic services and audio streaming.

Data, alarms, and audio can be accessed everywhere by PCs, tablets and smartphones via web page. The alarms are delivered to 4 different NMS with SNMP and e-mail. The LED and LCD panel allows a snapshot viewing of the parameters under control. Wolf 1MS is developed with the latest technology and free of wear parts (fans, HDD).

WOLF 1MS - FR VERSION

Wolf 1MS est un equipment pour le contrôle de signaux RF dans la bande FM. Wolf 1MS permet au radiodiffuseur de recevoir jusqu'à 32 chaînes. Le tuner FM c'est de haute qualité et effectue une analyse complète de: RF, MPX, RDS, Audio (Peak/RMS), RDS données de services statiques, dynamiques et streaming audio.

Les données, les alarmes et audio peuvent être accessibles partout par PC, tablettes et smartphones via une page web. Les alarmes sont transmises à 4 NMS différent avec SNMP et e-mail. Le panneau LED et LCD permet une visualisation instantanée des paramètres à l'étude. Wolf 1MS est développé avec les dernières technologies et sans des pièces d'usure (ventilateur, disque dur).

WOLF 2MS - EN VERSION

Wolf 2MS is a FM monitoring system designed for FM signal monitoring purpose. Wolf 2MS allows the broadcaster to receive up to 64 channels, through two internal FM tuner. Every single RF tuner performs a complete analysis of: RF, MPX, RDS, Audio (peak/RMS), RDS data static-dynamic services and audio streaming.

Data, alarms, and audio can be accessed everywhere by PCs, tablets and smartphones via web page. The alarms are delivered to 4 different NMS with SNMP and e-mail. The LED and LCD panel allows a snapshot viewing of the parameters under control. Wolf 2MS is developed with the latest technology and free of wear parts (fans, HDD).

WOLF 2MS - FR VERSION

Wolf 2MS est un equipment pour le contrôle de signaux RF dans la bande FM. Wolf 2MS permet au radiodiffuseur de recevoir jusqu'à 64 chaînes, par duex tuner. Chaque tuner FM c'est de haute qualité et effectue une analyse complète de: RF, MPX, RDS, Audio (Peak/RMS), RDS données de services statiques, dynamiques et streaming audio.

Les données, les alarmes et audio peuvent être accessibles partout par PC, tablettes et smartphones via une page web. Les alarmes sont transmises à 4 NMS différent avec SNMP et e-mail. Le panneau LED et LCD permet une visualisation instantanée des paramètres à l'étude. Wolf 2MS est développé avec les dernières technologies et sans des pièces d'usure (ventilateur, disque dur).